QuantaMesh T3048-LY2R

Network Switch

(Layer 2/3 Managed 10G/40G Switch)

Installation Guide

Contents

Chapter 1: Safety and Regulatory Information 1
1.1 Copyright 2
1.2 About the Manual 2
1.3 Intended Application Uses 2
1.4 Safety Information 2
1.4.1 Switch Safety Information 2
1.4.2 Installation Assembly Safety Instructions 4
1.4.3 Site Selection 4
1.4.4 Equipment Handling Practices 5
1.4.5 Power and Electrical Warnings 5
1.4.6 Power Cord Warnings 6
1.4.7 System Access Warnings 6
1.4.8 Rack Mount Warnings 7
1.4.9 Other Hazards 8
1.5 Regulatory and Compliance Information 9
1.5.1 Electromagnetic Compatibility Notices 9
1.5.2 Product Regulatory Compliance Markings 11

Chapter 2: Introduction 12
2.1 Front Panel 13
2.1.1 LED Description 13
2.2 Rear Panel 15
2.3 Package Contents 15

Chapter 3: Hardware Installation 16
3.1 Unpack the Hardware 17
3.2 Install the Switch 17
3.2.1 Select the Location 17
3.2.2 Install the Switch 18
3.3 Connect to Power 20
3.4 Check the Installation 20
3.5 Connect Equipment 20
3.5.1 SFP+ Port 20
3.5.2 QSFP+ Port 21
3.6 Connect to Console Port 22
3.7 Connect to Management Port 23
3.8 Connect to USB Port 24

Chapter 4: Initial Configuration 25
4.1 Initial Configuration Process 26
4.2 Configure the IP Address 26
4.2.1 Set IP Address Manually 26
4.2.2 Obtain IP Address by DHCP 27
4.3 Manage the Switch 28
4.3.1 CLI Management 28
4.3.2 SNMP Management 28

4.4 Upgrade the Firmware 29
4.4.1 Initialization Stage 29
4.4.2 Upgrade the Firmware Image File 30
4.5 Manually Install Vendor OS 31

Chapter 5: Troubleshooting 33
5.1 Troubleshooting 34
5.1.1 Diagnostic Switch Indicator 34
5.1.2 Power and Cooling Problems 34
5.1.3 Installation 35
5.1.4 In-Band Access 35
5.2 Replace the Power Supply Unit 35
5.2.1 Remove the Power Supply Unit 36
5.2.2 Replace the Power Supply Unit 36
5.3 Replace the Hot-Swappable Fan Module 37
5.3.1 Remove the Fan Module 37
5.3.2 Replace the Fan Module 37
5.4 Customer Support 37

List of Figures

Figure 2-1: Front Panel View....13
Figure 2-2: SFP+ and QSFP+ Port LEDs....13
Figure 2-3: Console and Management Port LEDs....14
Figure 2-4: Rear Panel View....15
Figure 3-1: Install Switch on Rack (Without Rail)....18
Figure 3-2: Holes Alignment....18
Figure 3-3: Secure Position....18
Figure 3-4: Pull Out Rack Rail....19
Figure 3-5: Install Switch on Rail....19
Figure 3-6: SFP+ Port Numbering....20
Figure 3-7: Connect SFP+ Module....21
Figure 3-8: QSFP+ Port Numbering....21
Figure 3-9: Connect QSFP+ Module....22
Figure 3-10: Connect to Console Port....23
Figure 3-11: Connect to Management Port....23
Figure 3-12: Connect to USB Port....24
Figure 4-1: Boot Up Console Screen....26
Figure 4-2: Set Service Port IP Screen....27
Figure 4-3: Set Service Port IP Screen....29
Figure 4-4: Example of TFTP Server Screen....30
Figure 4-5: Backup Image Screen Sample....30
Figure 4-6: Set Boot Image Success Screen Sample....30
Figure 4-7: Enter ONIE Linux Shell Screen....31
Figure 4-8: Stop ONIE Service Discovery Screen....31
Figure 4-9: Set Your Switch Box IP Address Screen....32
Figure 4-10: Verify IP Address Setting Screen....32
Figure 5-1: Access PSU Info on Web Utility....35
Figure 5-2: Remove Power Supply Unit....36
Figure 5-3: Remove Hot-swappable Fan Module....37

List of Tables

Table 1-1: Manual Conventions Icon.....2
Table 1-2: Product Regulatory Compliance Markings.....11
Table 2-1: SFP+ and QSFP+ Port LEDs.....13
Table 2-2: Console and Management Port LEDs.....14
Table 2-3: Power Supply and Fan Speed LEDs.....15
Table 5-1: Troubleshooting Tips.....34

Chapter 1: Safety and Regulatory Information

This chapter contains important information on safety and regulatory, as well as conventions used in this installation guide.

Read this guide before installing and operating the system.

1.1 Copyright

All specifications and figures are subject to change without prior notice. Actual products may look different from the photos.

All trademarks and logos mentioned in this guide are the properties of their respective holders.

Copyright © 2017 Quanta Computer Inc. All rights reserved.

1.2 About the Manual

This installation guide is meant for network administrators with inept knowledge in network management.

To avoid personal injury or property damage, before you begin installing the product, read, observe, and adhere to all the following safety instructions and information.

The following symbols are used throughout the guide to highlight important information and may be marked on the product and / or the product packaging.

Table 1-1: Manual Conventions Icon

	NOTE: Indicates useful information.
	WARNING: Indicates safety information that if ignored may cause the system to malfunction or damage other equipment.
	CAUTION: Indicates safety information that if ignored may cause personal injury or death.

1.3 Intended Application Uses

This product was evaluated as Information Technology Equipment (ITE). which may be installed in offices, schools, computer rooms, and similar commercial type locations. The suitability of this product for other product categories and environments (such as medical, industrial, residential, alarm systems, and test equipment), other than an ITE application, may require further evaluation.

1.4 Safety Information

1.4.1 Switch Safety Information

To reduce the risk of body injury, electrical shock, fire, and equipment damage, read this document and observe all warnings and precautions before installing or maintaining your switch.

In the event of a conflict between the information in this document and the information provided with the product or on the website of a particular product, the product documentation takes precedence.

The switch should be integrated and serviced only by technically qualified persons.

You must adhere to the guidelines in this guide and the assembly instructions in the switch manuals to ensure and maintain compliance with existing product certifications and approvals. Use only the described, regulated components specified in this guide. Use of other products / components will void the UL Listing and other regulatory approvals of the product, and may result in noncompliance with product regulations in the region(s) in which the product is sold.

Follow the safety guidelines below to ensure personal safety and protect the system and the working environment from potential damage.

CAUTION:
The power supplies in the system may produce high voltages and energy hazards which can cause bodily harm. Do not remove the covers and access any of the components inside the system.

CAUTION:
To reduce the risk of electrical shock, disconnect all power supply cables before servicing the system.

CAUTION:
Do not use the mounted equipment as a shelf or a work space.

Restricted Access Location: The switch is intended for installation only in a Server Room or Computer Room where both these conditions apply:

- access can only be gained by SERVICE PERSONS or by USERS who have been instructed about the reasons for the restrictions applied to the location and about any precautions that shall be taken; and
- access is through the use of a TOOL or lock and key, or other means of security, and is controlled by the authority responsible for the location.

WARNING:
When a power supply needs replacement, replace the power supply only with the same or equivalent type recommended by the manufacturer. Replacing with an incorrect power supply may cause explosion.

- Observe and follow service markings. Do not service the product yourself. Components inside the system should only be serviced by trained service technician.
- If any of the following conditions occur, unplug the equipment from the electrical outlet and replace the part or contact a trained service technician:
    - The power cable, extension cable, or plug is damaged
    - The equipment has been exposed to water
    - The equipment has been dropped or damaged
    - The equipment does not operate correctly when you follow the operating instructions
- Do not spill food or liquid on the equipment.
- Never operate the equipment in a wet environment.
- Do not push any objects into the opening of the equipment. Doing so may short internal components and cause fire or electric shock.
- Use the system only with approved equipment.
- Allow the product to cool before removing any peripherals.
- Operate the equipment only from the type of external power source indicated on the electrical ratings label. If you are unsure of the type of power source required, consult your local power company.
- Use only approved power cable(s).
- To help prevent electric shock, plug the system and peripheral power cables into properly grounded electrical outlets. Do not use adapter plugs or remove the grounding prong from a cable. If you must use an extension cable, use an extension cable with properly grounded plugs.

- Observe extension cable and power strip ratings. Ensure that the total ampere rating of all products plugged into the extension cable or power strip does not exceed 80% of the ampere ratings limit for the extension cable or power strip.
- To protect the equipment from sudden, transient increase or decrease in electrical power, use a surge suppressor, line conditioner, or uninterruptible power supply (UPS).
- Do not modify power cables or plugs. Consult a licensed electrician or your power company for site modifications. Always follow your local/national wiring rules.
- To avoid possible damage to the system board, wait 5 seconds after turning off the system before removing a component from the system board or disconnecting a peripheral device.
- When connecting or disconnecting power to the hot-pluggable power supply units, observe the following guidelines:
    - Unplug the power cable before removing the power supply.
    - Install the power supply to the system before connecting the power cable to the power supply.
    - If the system has multiple sources of power, disconnect power from the system by unplugging all power cables from the power supplies.
- When disconnecting a cable, pull on its connector or on its strain-relief loop, and not on the cable itself.

1.4.2 Installation Assembly Safety Instructions

- The power supply in this product contains no user-serviceable parts. Refer servicing only to qualified personnel.
- Do not attempt to modify or use the supplied AC power cord if it is not the exact type required. A product with more than one power supply will have a separate AC power cord for each supply.
- To remove the AC power from the system, you must unplug each AC power cord from the wall outlet or power supply. The power cord(s) is considered the disconnect device to the main (AC) power. The socket outlet that the system plugs into shall be installed near the equipment and shall be easily accessible.
- A microprocessor and heat sink may be hot if the system has been running. Also, there may be sharp pins and edges on some board and chassis parts. Contact should be made with care. Consider wearing protective gloves.
- Danger of explosion if the battery is incorrectly replaced. Replace only with the same or equivalent type recommended by the equipment manufacturer. Dispose of used batteries according to manufacturer's instructions.
- The system is safety certified as rack-mounted equipment for use in a server room or computer room, using the customer rack kit. The rail racks are designed to carry only the weight of the system. Do not place additional load onto any rail-mounted equipment. System rack kits are intended to be installed in a rack by trained service technicians.

1.4.3 Site Selection

The system is designed to operate in a typical office environment. Choose a site that is:

- Clean and free of airborne particles (other than normal room dust).
- Well ventilated and away from sources of heat including direct sunlight and radiators.
- Away from sources of vibration or physical shock.
- Isolated from strong electromagnetic fields produced by electrical devices.
- In regions that are susceptible to electrical storms, we recommend you plug your system into a surge suppressor and disconnect telecommunication lines to your modem during an electrical storm.

- Provided with a properly grounded wall outlet.
- Provided with sufficient space to access the power supply cord(s), because they serve as the product's main power disconnect.
- Provided with either two independent AC power sources or two independent phases from a single source.

1.4.4 Equipment Handling Practices

Reduce the risk of personal injury or equipment damage:

- Conform to local occupational health and safety requirements when moving and lifting equipment.
- Use mechanical assistance or other suitable assistance when moving and lifting the equipment.
- To reduce the weight for easier handling, remove any easily detachable components.

1.4.5 Power and Electrical Warnings

CAUTION:
The power is active whenever the system is plugged in. To remove power from the system, you must unplug the AC power cord from the wall outlet. Your system may use more than one AC power cord. Make sure all AC power cords are unplugged. Make sure the AC power cord(s) is/are unplugged before you open the chassis, or add or remove any non hot-plug components.

CAUTION:
Do not attempt to modify or use an AC power cord if it is not the exact type required. A separate AC cord is required for each system power supply.

CAUTION:
The power supply in this product contains no user-serviceable parts. Do not open the power supply. Hazardous voltage, current and energy levels are present inside the power supply. Return to manufacturer for servicing.

CAUTION:
When replacing a hot-plug power supply, unplug the power cord to the power supply being replaced before removing it from the switch.

1.4.6 Power Cord Warnings

If an AC power cord was not provided with your product, purchase one that is approved for use in your country.

CAUTION:
To avoid electrical shock or fire, check the power cord(s) that will be used with the product as follows:

- Do not attempt to modify or use the AC power cord(s) if they are not the exact type required to fit into the grounded electrical outlets.
- The power cord(s) must meet the following criteria: The power cord must have an electrical rating that is greater than that of the electrical current rating marked on the product.

CAUTION:
The power cord must have safety ground pin or contact that is suitable for the electrical outlet.

CAUTION:
The power supply cord(s) is/are the main disconnect device to AC power. The socket outlet(s) must be near the equipment and readily accessible for disconnection.

CAUTION:
The power supply cord(s) must be plugged into socket outlet(s) that is/are provided with a suitable earth ground.

1.4.7 System Access Warnings

CAUTION:
To avoid personal injury or property damage, the following safety instructions apply whenever accessing the inside of the product:

- Turn off all peripheral devices connected to this product.
- Disconnect the AC power by unplugging all AC power cords from the system or wall outlet.
- Disconnect all cables and telecommunication lines that are connected to the system.
- Retain all screws or other fasteners when removing access cover(s). Upon completion of accessing inside the product, refasten access cover with original screws or fasteners.
- Do not access the inside of the power supply. There are no serviceable parts in the power supply. Return to the manufacturer for servicing.
- Power down the switch and disconnect all power cords before adding or replacing any non hot-plug component.
- When replacing a hot-plug power supply, unplug the power cord to the power supply being replaced before removing the power supply from the switch.

CAUTION:
Unless you are adding or removing a hot-plug component, allow the system to cool before opening the covers. To avoid the possibility of coming into contact with hot component(s) during a hot-plug installation, be careful when removing or installing the hot-plug component(s).

CAUTION:
To avoid injury do not contact moving fan blades. If your system is supplied with a guard over the fan, do not operate the system without the fan guard in place.

1.4.8 Rack Mount Warnings

The following installation guidelines are required by UL for maintaining safety compliance when installing your into a rack.

The equipment rack must be anchored to an unmovable support to prevent it from tipping when a server or piece of equipment is extended from it. The equipment rack must be installed according to the rack manufacturer's instructions.

Install equipment in the rack from the bottom up, with the heaviest equipment at the bottom of the rack.

Extend only one piece of equipment from the rack at a time.

You are responsible for installing a main power disconnect for the entire rack unit This main disconnect must be readily accessible, and it must be labeled as controlling power to the entire unit, not just to the server(s).

To avoid risk of potential electric shock, a proper safety ground must be implemented for the rack and each piece of equipment installed in it.

Elevated Operating Ambient - If installed in a closed or multi-unit rack assembly, the operating ambient temperature of the rack environment may be greater than the room ambient. Therefore, consideration should be given to installing the equipment in an environment compatible with the maximum ambient temperature (Tma) specified by the manufacturer.

Reduced Air Flow - Installation of the equipment in a rack should be such that the amount of air flow required for safe operation of the equipment is not compromised.

Mechanical Loading - Mounting of the equipment in the rack should be such that a hazardous condition is not achieved due to uneven mechanical loading.

Circuit Overloading - Consideration should be given to the connection of the equipment to the supply circuit and the effect that overloading of the circuits might have on overcurrent protection and supply wiring. Appropriate consideration of equipment nameplate ratings should be used when addressing this concern.

Reliable Earthing - Reliable earthing of rack-mounted equipment should be maintained.

Particular attention should be given to supply connections other than direct connections to the branch circuit (e.g. use of power strips).

1.4.9 Other Hazards

1.4.9.1 Battery Replacement

CAUTION:
There is the danger of explosion if the battery is incorrectly replaced. When replacing the battery, use only the battery recommended by the equipment manufacturer.

CAUTION:
Dispose of batteries according to local ordinances and regulations.

CAUTION:
Do not attempt to recharge a battery.

CAUTION:
Do not attempt to disassemble, puncture, or otherwise damage a battery.

1.4.9.2 Cooling and Airflow

CAUTION:
Carefully route cables as directed to minimize airflow blockage and cooling problems. For proper cooling and airflow, operate the system only with the chassis covers installed. Operating the system without the covers in place can damage system parts. To install the covers:

- Check first to make sure you have not left loose tools or parts inside the system.
- Check that cables, add-in cards, and other components are properly installed.
- Attach the covers to the chassis according to the product instructions.

1.4.9.3 Laser Peripherals or Devices

CAUTION:
To avoid risk of radiation exposure and/or personal injury:

- Do not open the enclosure of any laser peripheral or device
- Laser peripherals or devices are not serviceable
- Return to the manufacturer for servicing
- Use certified Optical Fiber Transceiver Class 1 Laser Product

1.5 Regulatory and Compliance Information

1.5.1 Electromagnetic Compatibility Notices

1.5.1.1 FCC Verification Statement (USA)

This device complies with Part 15 of the FCC Rules. Operation is subject to the following two conditions: (1) this device may not cause harmful interference, and (2) this device may accept any interference received, including interference that may cause undesired operation.

This equipment has been tested and found to comply with the limits for a Class A digital device, pursuant to part 15 of the FCC Rules. These limits are designed to provide reasonable protection against harmful interference when the equipment is operated in a commercial environment. This equipment generates, uses, and can radiate radio frequency energy and, if not installed and used in accordance with the instruction manual, may cause harmful interference to radio communications. However, there is no guarantee that interference will not occur in a particular installation. If this equipment does cause harmful interference to radio or television reception, which can be determined by turning the equipment off and on, the user is encouraged to try to correct the interference by one or more of the following measures:

- Reorient or relocate the receiving antenna.
- Increase the separation between the equipment and the receiver.
- Connect the equipment to an outlet on a circuit other than the one to which the receiver is connected.
- Consult the dealer or an experienced radio/TV technician for help.

Any changes or modifications not expressly approved by the grantee of this device could void the user's authority to operate the equipment. The customer is responsible for ensuring the compliance of the modified product.

Only peripherals (computer input/output devices, terminals, printers, etc.) that comply with FCC Class A or B limits may be attached to this computer product. Operation with noncompliant peripherals is likely to result in interference to radio and TV reception.

All cables used to connect to peripherals must be shielded and grounded. Operation with cables, connected to peripherals, that are not shielded and grounded may result in interference to radio and TV reception.

1.5.1.2 Europe (CE Declaration of Conformity)

This product has been tested in accordance to, and complies with the Low Voltage Directive (73/23/EEC) and EMC Directive (89/336/EEC). The product has been marked with the CE Mark to illustrate its compliance.

1.5.1.3 VCCI (Japan)

この装置は、情報処理装置等電波障害自主規制協議会（VCCI）の基準に基づくクラス A 情報技術装置です。この装置を家庭環境で使用すると電波妨害を引き起こすことがあります。この場合には使用者が適切な対策を講ずるように要求されることがあります。

English translation of the notice above:

This is a Class A product based on the standard of the Voluntary Control Council for Interference (VCCI) from Information Technology Equipment. If this is used near a radio or television receiver in a domestic environment, it may cause radio interference. Install and use the equipment according to the instruction manual.

ENGLISH

1.5.1.4 CCC Statement

声明

此为A级产品，在生活环境中，该产品可能会造成无线电干扰
在这种情况下，可能需要用户对其干扰采取切实可行的措施

1.5.1.5 Regulated Specified Components

To maintain the UL listing and compliance to other regulatory certifiications and/or declarations, the following regulated components must be used and conditions adhered to. Interchanging or use of other component will void the UL listing and other product certifications and approvals.

Updated product information for configurations can be found on the site at the following URL: http://www.QuantaQCT.com

If you do not have access to the Web address, please contact your local representative.

- Add-in cards: must have a printed wiring board flammability rating of minimum UL94V-1. Add-in cards containing external power connectors and/or lithium batteries must be UL recognized or UL listed. Any add-in card containing modem telecommunication circuitry must be UL listed. In addition, the modem must have the appropriate telecommunications, safety, and EMC approvals for the region in which it is sold.
- Peripheral Storage Devices: must be UL recognized or UL listed accessory and TUV and VDE licensed. Maximum power rating of any one device is 19 watts. Total server configuration is not to exceed the maximum loading conditions of the power supply.

1.5.1.6 Restriction of Hazardous Substances (RoHS) Compliance

Quanta® Computer Inc. has a system in place to restrict the use of banned substances in accordance with the European Directive 2002/95/EC. Compliance is based on declaration that materials banned in the RoHS Directive are either (1) below all applicable threshold limits or (2) an approved / pending RoHS exemption applies.

RoHS implementation details are not fully defined and may change.

Threshold limits and banned substances are noted below:

- Quantity limit of 0.1% by mass (1000 PPM) for:
    - Lead
    - Mercury
    - Hexavalent Chromium
    - Polybrominated Biphenyls Diphenyl Ethers (PBDE)
- Quantity limit of 0.01% by mass (100 PPM) for:
    - Cadmium

1.5.1.7 End of Life / Product Recycling

Product recycling and end-of-life take-back systems and requirements vary by country. Contact the retailer or distributor of this product for information about product recycling and/or take-back.

1.5.2 Product Regulatory Compliance Markings

This product is marked with the following product certification markings:

Table 1-2: Product Regulatory Compliance Markings

Regulatory Compliance	Region	Marking
cULus Listing Marks	USA / Canada	c UL us LISTED
CE Mark	Europe	CE
FCC Marking (Class A)	USA	This device complies with Part 15 of the FCC Rules. Operation of this device is subject to the following two conditions: (1) This device may not cause harmful interference, and (2) This device must accept any interference received, including interference that may cause undesired operation.
VCCI Marking (Class A)	Japan	この装置は、情報処理装置等電波障害自主規制協議会（VCCI）の基準に基づくクラス A 情報技術装置です。この装置を家庭環境で使用すると電波妨害を引き起こすことがあります。この場合には使用者が適切な対策を講ずるように要求されることがあります。
ICES	Canada	This Class A digital apparatus complies with Canadian ICES-003. Cet appareil numérique de la classe A est conforme à la norme NMB-003 du Canada.
Recycling Package Mark	Other than China	Corrugated Recycles CFB
CCC	China	警告 此为A级产品，在生活环境中，该产品可能会造成无线电干扰。在这种情况下，可能需要用户对干扰采取切实可行的措施。

Chapter 2: Introduction

The QuantaMesh T3048-LY2R switch is a high performance, energy efficient and low latency layer 2/3/4 Ethernet switch with 48 1/10G SFP+ and 4 10/40G QSFP+ ports in a compact rack unit size. The 4 40G uplink ports provide up 160G bandwidth to connect with the core switch. Each uplink QSFP+ port can be independently configured as 1 x 40G or 4 x 10G so that the maximum QuantaMesh T3048-LY2R can form a total of 64-port of 10G Ethernet switch.

The switch boasts of comprehensive network management and IP multicast functions. Its fan reversible design provides system cooling to fulfill different customer demands for server room setup and application.

This chapter describes the hardware overview, supported features, and package contents of the switch.

2.1 Front Panel

The following figures show the front panel of the switch.

Figure 2-1: Front Panel View

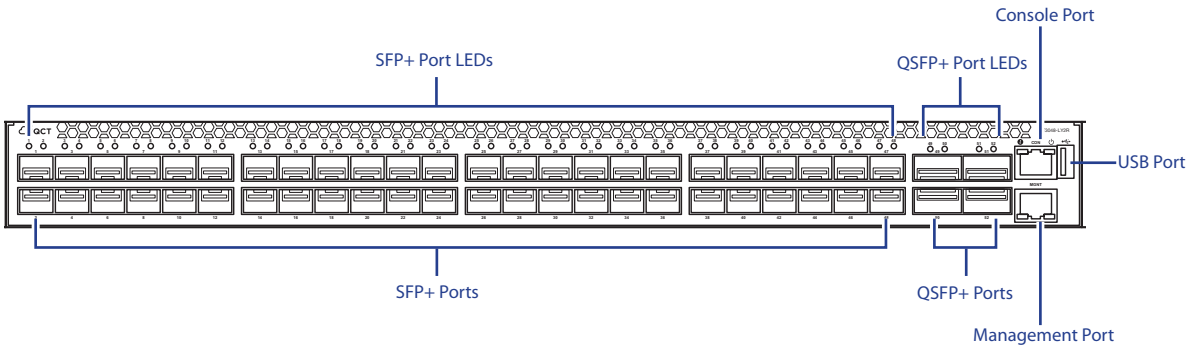

2.1.1 LED Description

The following tables describe the LEDs on the front of the switch.

2.1.1.1 SFP+ and QSFP+ Port LEDs

Figure 2-2: SFP+ and QSFP+ Port LEDs

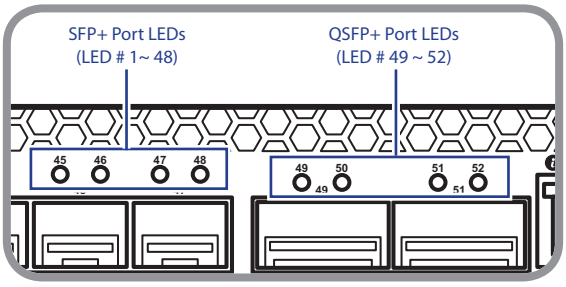

Table 2-1: SFP+ and QSFP+ Port LEDs

LED	Description
SFP+ Port	• **Green**: A valid network link is established on the port. • **Flashing Green**: Data transmission and receiving packet in progress. • **Off**: No network link is established.
QSFP+ Port	• **Green**: A valid network link is established on the port. • **Flashing Green**: Data transmission and receiving packet in progress. • **Off**: No network link is established.

2.1.1.2 Console and Management Port LEDs

Figure 2-3: Console and Management Port LEDs

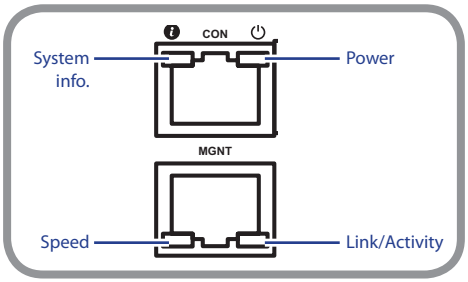

Table 2-2: Console and Management Port LEDs

LED		Description
Console Port	System info.	• **Orange**: Software boots up. • **Off**: Software is ready.
	Power	• **Green**: Power is on. • **Off**: Power is off.
Management Port	Speed	• **Orange**: A valid 1G network link is established. • **Green**: A valid 100Mbps network link is established. • **Off**: A valid 10Mbps network link is established.
	Link/Activity	• **Green**: A valid network link is established. • **Flashing Green**: Network transmission and receiving packet in progress. • **Off**: No network activity.

2.2 Rear Panel

The following figure shows the rear panel of the switch.

Figure 2-4: Rear Panel View

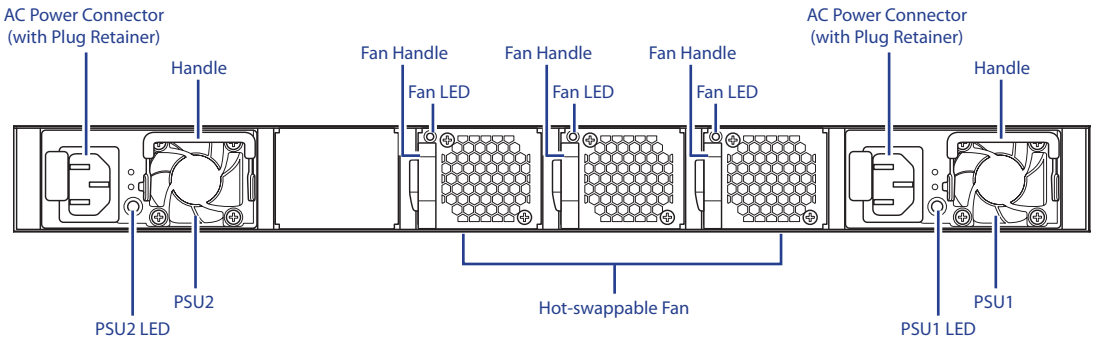

The switch has two Power Supply Units (PSU) and three hot-swappable fan modules.

There are two types of hot-swappable fan modules and PSU:

- Blue: indicates front-to-back airflow.
- Green: indicates back-to-front airflow.

The AC power connector is a standard three-pronged connector. The switch automatically adjusts its power setting to any supply voltage in the range from 100~240 VAC at 50~60 Hz.

When the PSU is connected to the power source, the PSU LED lights green.

Table 2-3: Power Supply and Fan Speed LEDs

LED	Description
Power Supply	• **Green**: Power connection works normally. • **Yellow**: Possible issues: - Fan Lock (15 sec) - OTP: Over Temperature Process - OCP: Over Current Process - OVP: Over Voltage Process - UVP: Under Voltage Process
Fan Speed	• **Red**: Fan speed failure. • **Dark**: Fan speed works normally.

2.3 Package Contents

The following items are included with a standard package. When you open the box, check if all items are included and free of damage.

- One QuantaMesh T3048-LY2R Layer III 10-Gigabit Managed Switch
- Mounting kit: 2 mounting brackets and screws (already install on the switch)
- Four rubber feet with adhesive backing
- Console cable
- Two AC power cords
- Statement paper

Chapter 3: Hardware Installation

This chapter describes the following topics:

- Unpack the Hardware
- Install the Switch
- Connect to Power
- Check the Installation
- Connect Equipment
- Connect to Console Port
- Connect to Management Port
- Connect to USB Port

3.1 Unpack the Hardware

Ensure all items are included in the package before starting the installation.

NOTE:
The packing box is heavy. It is recommended for two persons to carry the box and perform the installation.

1. Place the box on a flat and stable surface and cut the straps securing the box.
2. Remove the hardware and place it on a flat and clean surface.
3. Remove all other items from the box.
4. Inspect each item to make sure all items are included and free from damage (see “Select the Location” on page 17).
5. Keep the packaging box in case you need to transport the switch.

3.2 Install the Switch

For a successfully installation, perform the steps below in the following order:

1. Select the location (see “3.2.1 Select the Location” on page 17).
2. Install the switch (see “3.2.2 Install the Switch” on page 18).
3. Connect the Power Source (see “3.3 Connect to Power” on page 20).
4. Check the installation (see “3.4 Check the Installation” on page 20).

3.2.1 Select the Location

The switch can be installed in the following ways:

- Flat surface installation: Placed as a standalone unit on a flat surface.
- Rack-mounted installation: Installed in a standard rack

3.2.1.1 Installation and Safety Considerations

Consider the following when choosing an installation location:

- The installation location allows you to view and access the front and rear panel ports.
- The installation location is located within a proper distance to the power source. The power source must be properly grounded and readily accessible.
- The installation location allows you to route and organize cables for easy cable management and maintenance.
- The installation location is free from strong electromagnetic field sources, such as radiators, motors, and heat sources.
- The installation location is not exposed to direct sunlight, rain or moisture.
- The installation surroundings must have adequate ventilation. Proper clearance between the switch and the wall or other equipment must be observed.
- If installing on a rack, ensure the cabinet is stable and secure to withstand any unexpected movement, such as an earthquake. Ensure the rack or cabinet can support the weight of the switch and other additional weight.

3.2.1.2 Items Required for Installation

The following items are required for installing, configuring, and connecting the switch:

- A workstation
- Ethernet cable
- Console cable
- SFP+ modules
- QSFP+ modules
- Phillips screwdriver

3.2.2 Install the Switch

3.2.2.1 Install in a Rack

You can install the switch in most standard 19-inch (48.3-cm) racks.

Without Rail Installation

Align the built-in mounting ear to the rack holes and secure them with screws.

Figure 3-1: Install Switch on Rack (Without Rail)

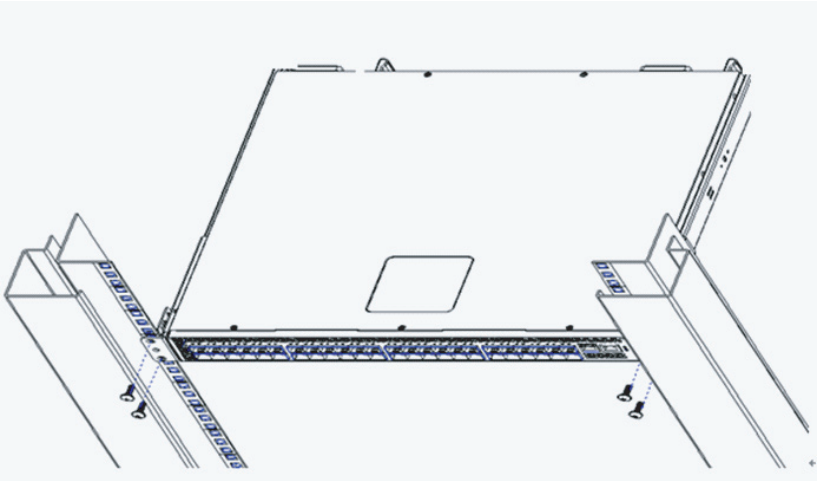

With Rail Installation

1. Align the rail holes with the holes on the switch.

Figure 3-2: Holes Alignment

2. Secure them with two screws.

Figure 3-3: Secure Position

3. Pull out the internal rail.

Figure 3-4: Pull Out Rack Rail

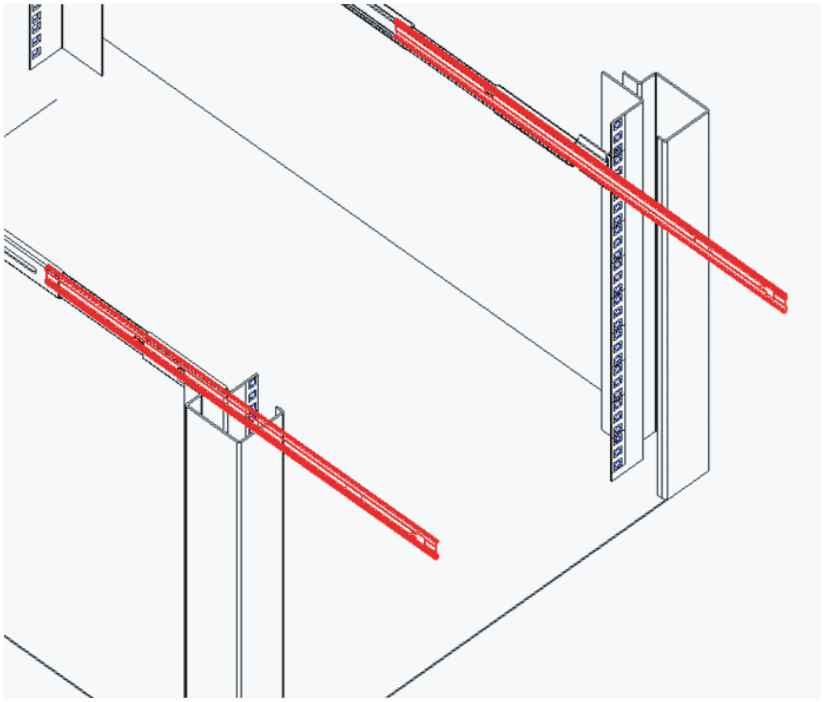

4. Align the brackets to the rail holes and secure them with screws.

Figure 3-5: Install Switch on Rail

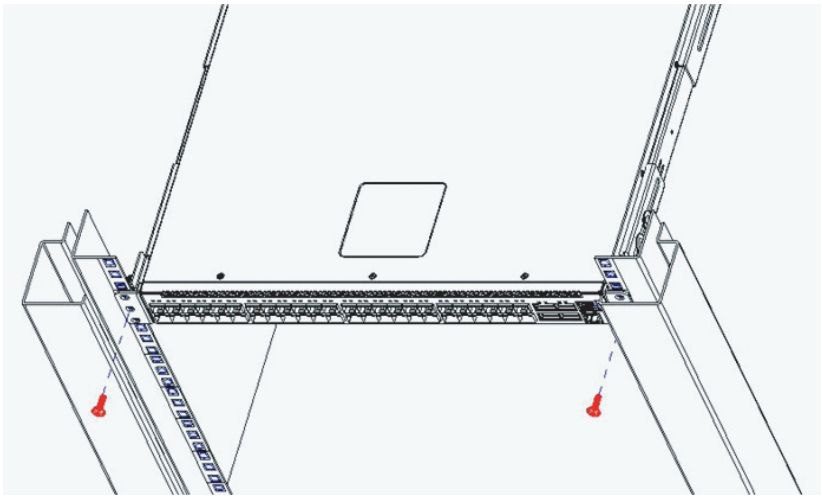

3.3 Connect to Power

The switch has two Power Supply Units (PSU). Each PSU has an AC power connector. Depending on your needs, you may opt to use one or both PSUs at a time.

To connect the switch to a power source, do the following:

1. Connect one end of the AC power cord to an AC power connector.
2. If you want to use two PSUs, connect another strip of AC power cord to the other AC power connector. Otherwise, skip this step.
3. Connect the other end(s) of the AC power cord(s) to grounded power outlet(s).

The switch has no power button. Once an AC power cord is connected to a power outlet, the switch power is turned on. The Power LED lights green.

3.4 Check the Installation

Check the following pointers to inspect the installation:

- Is the switch securely installed and stable?
- Is/Are the AC power cord(s) properly connected to the power outlet(s)?
- Is the Power LED (on the Console port) lit green?

3.5 Connect Equipment

You can connect equipment to the switch through the SPF+ and QSFP+ ports.

3.5.1 SFP+ Port

The switch has 48-SFP+ ports. The Small Form-Factor Pluggable Plus (SFP+) port is the second generation of the SFP interconnect system designed for 10Gb/s data rate.

The SFP+ ports are numbered and have corresponding SFP+ port LEDs. The lower row ports are even numbered (i.e. Port 2, Port 4, Port 6, and so on). The upper row ports are odd numbered (i.e. Port 1, Port 3, Port 5, and so on). See illustration below.

Figure 3-6: SFP+ Port Numbering

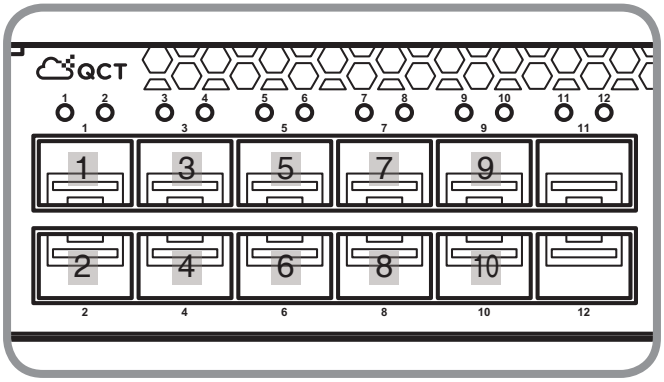

The 48-SFP+ ports support 10-gigabit IEEE 802.3ae Ethernet for fiber mediums.

To install an SFP+ module, do the following:

1. Slide the SFP+ module into an SFP+ port.

Figure 3-7: Connect SFP+ Module

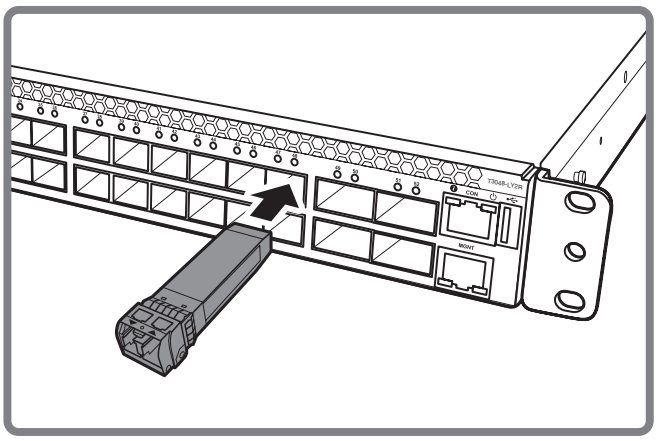

2. Push completely until the module locks into place.
3. Repeat the above procedures to install additional SFP+ modules.

The SFP+ port LED lights green when the network link is established.

NOTE:
SFP+ modules are not included in the package. Contact your dealer to purchase.

3.5.2 QSFP+ Port

The switch has 4-QSFP+ (Quad SFP). QSFP+ provides four channels of data in one pluggable interface. Each channel can transfer data at 10Gb/s and therefore each interface can transfer data up to 40Gb/s.

The QSFP+ ports are numbered and have corresponding QSFP+ port LEDs as shown on the illustration below.

Figure 3-8: QSFP+ Port Numbering

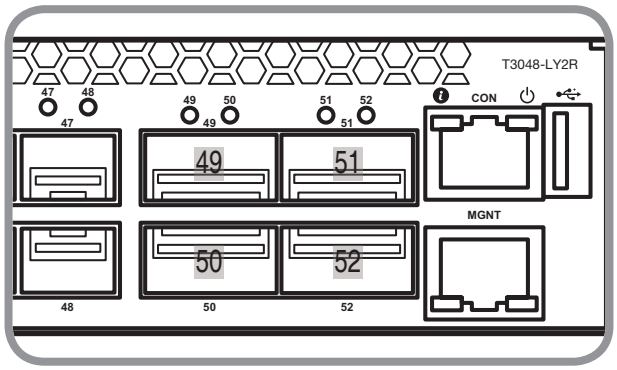

The 4-QSFP+ ports support 40-gigabit IEEE 802.3ba Ethernet for fiber mediums.

To install a QSFP+ module, do the following:

1. Slide the QSFP+ module into a QSFP+ port.

Figure 3-9: Connect QSFP+ Module

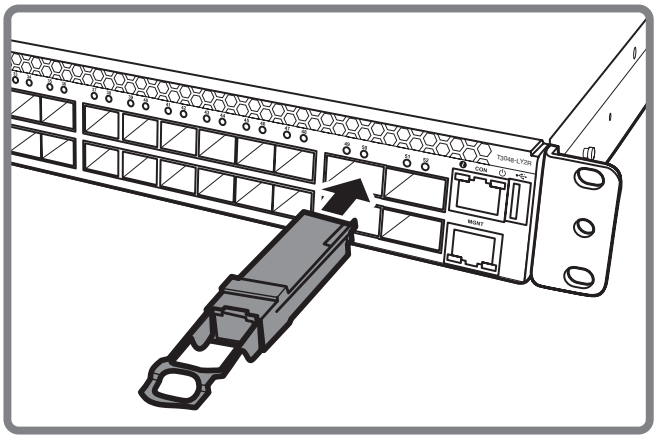

2. Push completely until the module locks into place.
3. Repeat the above procedures to install additional QSFP+ modules.

The QSFP+ port LED lights green when the network link is established.

NOTE:
QSFP+ modules are not included in the package. Contact your dealer to purchase.

3.6 Connect to Console Port

The console port is used for setting up and managing the switch via a connection to a console terminal or PC using a terminal emulation program. You can connect the switch to a terminal or PC using the supplied console cable (RJ-45 male to RS-232 female cable) for serial communication.

Below is the console cable wiring specification table:

RJ-45 Port of Switch	DB9 Female Port of PC	Abbreviation	Description
3	2	RD	Received Data
6	3	TD	Transmit Data
1	8	CTS	Clear To Send
8	7	RTS	Request To Send
5	5	GND	Ground

To connect to the console, do the following:

1. Connect the RJ-45 connector to the console port of the switch.

Figure 3-10: Connect to Console Port

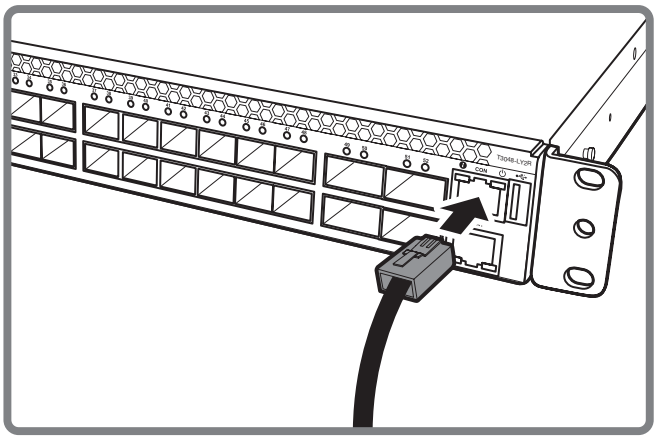

2. Connect the RS-232 end to a terminal or PC.
3. Manage the switch using the CLI commands (refer to the CLI User Manual for more information).

NOTE:

- The port LEDs beside the console port show the status of power and system OS (see “Install the Switch” on page 18).

3.7 Connect to Management Port

The management port is a dedicated port interface which is segregated from data traffic crossing other downlink or uplink ports. The port supports auto-negotiation. If the attached device also supports auto-negation, the transmission can operate in either half or full duplex, and data rate can be in 10Mbps, 100Mbps, or 1Gbps. Telnet, SNMP, and Web browser utility can all go through this port for local or remote management after the IP address, subnet mask, and default gateway are properly configured.

To connect to the management port, do the following:

1. Connect one end of an Ethernet cable to the management port.

Figure 3-11: Connect to Management Port

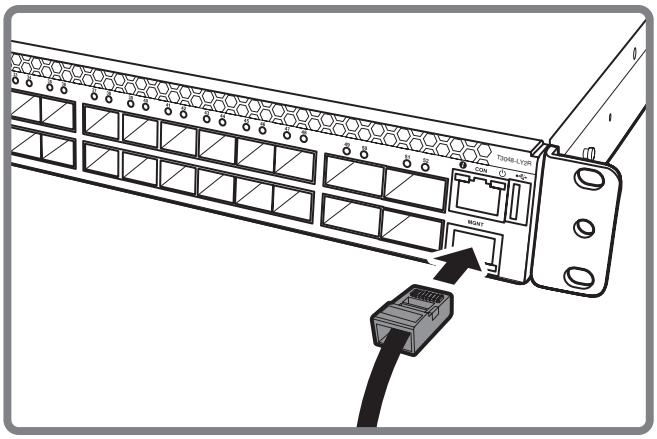

2. Connect the other end of the Ethernet cable to a network.

The Management port LED (Link/Activity LED) lights green when the network link is established.

NOTE:
Ethernet cables are not included in the package. Contact your dealer to purchase.

3.8 Connect to USB Port

The USB port is used to connect a high-speed USB device.

Plug the USB connector of the device to connect to the USB port.

Figure 3-12: Connect to USB Port

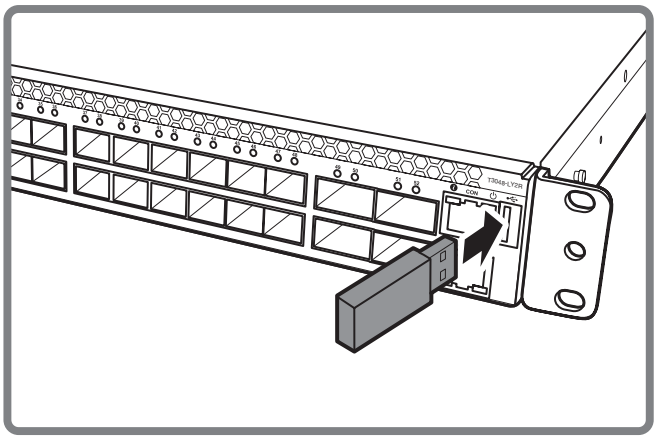

Chapter 4: Initial Configuration

This chapter describes the following topics:

- Initial Configuration Process
- Configure the IP Address
- Manage the Switch
- Upgrade the Firmware
- Manually Install Vendor OS

The following pages in this section are showing the IP address configuration and firmware upgrade SOP of Quanta runtime image.

4.1 Initial Configuration Process

When using the switch for the first time, configuration must be carried out through a console. Perform the following steps to configure the switch:

1. Connect a terminal to the console port.
2. Manually configure the IP Address by CLI.
3. Manage the switch.

4.2 Configure the IP Address

You can configure the switch with a static IP address or use a Dynamic Host Configuration Protocol (DHCP) server to automatically obtain an IP address for the switch. For the first time configuration, it is recommended to set the IP address manually.

4.2.1 Set IP Address Manually

To set the IP address of the switch manually, perform the following:

1. Connect the switch to a computer with a terminal emulation program via the Console port.
2. On the terminal emulation program, select the appropriate serial port and set the following configurations:
    - Baud rate: 115200
    - Data width: 8 bits
    - Parity: None
    - Stop bits: 1
    - Flow control: None
3. After setting up the terminal, plug the power cable(s) to the AC power connector(s) of the switch. The boot up screen appears in the terminal. The boot up process may take a few minutes to complete.

Figure 4-1: Boot Up Console Screen

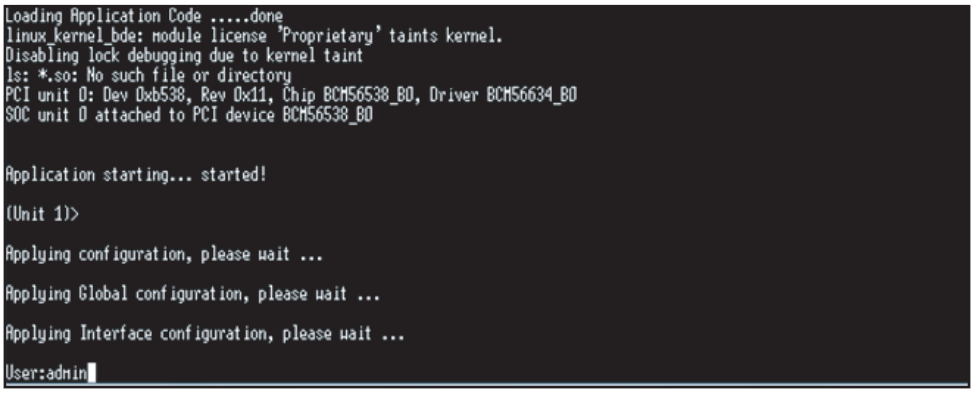

4. When prompted for the User and Password, input “**admin**” for user and leave the password empty, then press <Enter>.
5. On the prompt, input “**configure**”. The prompt changes to “**(Switch) (Config) #**”.

6. Set the service port IP address (in the example below, the service port IP address is set to 192.168.2.1).

   Configure
   Serviceport protocol none
   Serviceport ip 192.168.2.1 255.255.255.0 <gateway>
   exit

Figure 4-2: Set Service Port IP Screen

```
Application starting... started!

(Unit 1)>

Applying configuration, please wait ...

Applying Global configuration, please wait ...

Applying Interface configuration, please wait ...

User:admin
Password:
(Switch) #configure

(Switch) (Config)#serviceport protocol non

Changing protocol mode will reset ip configuration.
Are you sure you want to continue? (y/n)y

(Switch) (Config)#serviceport ip 10.0.10.5 255.255.0.0

(Switch) (Config)#exit

(Switch) #
```

7. From this point, the IP address, subnet mask, and gateway of the switch has been set. On the command prompt, input "**exit**" to go back one level. The prompt changes to "**(Switch) #**".

8. Input "**show serviceport**" to display the network configurations of the switch.

4.2.2 Obtain IP Address by DHCP

By default, DHCP client is enabled. The Ethernet switch will automatically obtains the IP address, subnet mask, and default gateway from the DHCP server.

4.3 Manage the Switch

After the initial configuration, you may manage and monitor network activity by CLI or SNMP management, or by using the Web browser utility.

4.3.1 CLI Management

The Command Line Interface (CLI) is administered when the terminal is directly connected to the Console port of the switch. This is an out-of-band connection, which means that it is on a different circuit than normal network communications, and thus works even when the network is down. After setting the IP address of the switch, you can also use a console program, such as Telnet, to access and control the switch.

For more information on CLI commands, see the “CLI Documentation”.

4.3.2 SNMP Management

After configuring the IP address and upgrading the firmware, you can manage and monitor network activity by SNMP.

Simple Network Management Protocol (SNMP) is an application–layer protocol defined by the Internet Architecture Board (IAB) in RFC1157 for managing and monitoring network devices. SNMP is one of widely accepted protocols used to manage and monitor network elements. The switch supports SNMP version 1.0, 2.0, and 3.0.

The basic components and functions of SNMP are as follows:

- A Managed Device, in this case the switch
- An SNMP Agent
- SNMP Manager
- Management Information Database or Base (MIB)

The switch comes bundled with an SNMP Agent, which runs locally on the device. The SNMP Agent communicates with an SNMP-compatible console program, called the SNMP Manager.

The commonly shared database between the SNMP Agent and the SNMP Manager is called Management Information Base (MIB). In short, MIB files are the set of questions that the SNMP Manager can ask the SNMP Agent. The SNMP Agent collects these data locally and stores it, as defined in the MIB.

The MIBs contain a standard set of statistical and control values defined for the managed devices on a network. The SNMP protocol also allows the extension of these standard values with values specific to a particular SNMP Agent through the use of private MIBs. See the “SNMP Documentation” for more information on using SNMP.

By default, you can use the community name “public” to get SNMP objects or use “private” to get and set SNMP objects.

4.3.2.1 Telnet or SSH Management

By default, Telnet and SSH can be used to directly manage the switch without necessary settings.

4.4 Upgrade the Firmware

The switch firmware is continuously being upgraded to meet more networking demands. It is recommended to upgrade the firmware to ensure that your switch has the latest firmware for optimum performance.

NOTE:
Before upgrading process, please make sure your currently version on the switch. For example, the switch running with version 5.4.x.x only supported upgrade to v5.4.x.x. Please use correct firmware to upgrading.

4.4.1 Initialization Stage

1. Connect the TFTP server to the switch via the management port.
2. Set the service port IP address using the following commands:
   a. Connect the console cable to the console port.
   b. On a terminal emulation program (such as Teraterm or HyperTerm), set the baud rate to 115200 (115200, n, 8, 1).
   c. When prompted for the username and password, input “admin” for the username and leave the password empty.
   d. Set the service port IP address (in the example below, the service port IP address is set to 192.168.2.1):

      configure

      serviceport protocol none

      serviceport ip 192.168.2.1 255.255.255.0

      exit

Figure 4-3: Set Service Port IP Screen

```
User:admin
Password:

(Switch) #configure

(Switch) (Config)#serviceport protocol none

Changing protocol mode will reset ip configuration.
Are you sure you want to continue? (y/n) y

(Switch) (Config)#serviceport ip 192.168.2.1 255.255.255.0

(Switch) (Config)#exit

(Switch) #
```

3. Prepare the TFTP server and save the latest image file (*.stk) in its root directory (assuming that the IP address is 192.168.2.100).

Figure 4-4: Example of TFTP Server Screen

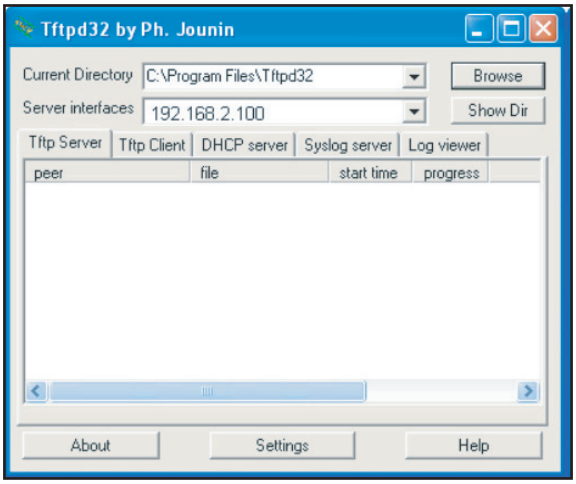

4.4.2 Upgrade the Firmware Image File

1. The switch supports two images, active and backup. Input the following command to download the image to backup image:
   copy tftp://<server ip addr>/<file name> image backup

Figure 4-5: Backup Image Screen Sample

```
(Switch) #copy tftp://192.168.2.100/QNOS-p05-5.4.01.18.stk image backup

Mode............................................. TFTP
Set Server IP.................................... 192.168.2.100
Path............................................. ./
Filename......................................... QNOS-p05-5.4.01.18.stk
Data Type........................................ Code
Destination Filename............................ backup

Management access will be blocked for the duration of the transfer
Are you sure you want to start? (y/n) y
```

2. Input the following command to set the backup image as the “next boot” image:
   boot-system opcode backup

Figure 4-6: Set Boot Image Success Screen Sample

```
(Switch) #boot-system opcode backup
Activating image backup ..

(Switch) #
```

3. Reboot the switch.

4. After the system boots up, input “**show version**” to display and verify the updated version.

4.5 Manually Install Vendor OS

With QUANTA ONIE code, it allows user to manually download an installer. You can use the Download Installer function which supports 3 types of different protocols (i.e. FTP, TFTP, and HTTP) to download the installer file from your local server.

To download and update the vendor OS code manually, perform the following:

1. Locate the specific QUANTA ONIE installer image that you want to download.
   For example, the installer file name: **ly3-onie-installer-1.5.3**
2. Place the installer file into your local FTP, TFTP, or HTTP server.
   For example, the server IP address: **192.168.2.153**
3. Go to ONIE Linux Shell:
   a. Connect your PC and the switch using a console cable.
   b. Enter ONIE Linux Shell.

Figure 4-7: Enter ONIE Linux Shell Screen

```
Hit any key to stop autoboot:  0

Loading Open Network Install Environment ...
Platform: powerpc-quanta_ly3-r0
Version : 1.5.3-20131014174847
WARNING: adjusting available memory to 30000000
## Booting kernel from Legacy Image at 01000000 ...
   Image Name:   quanta_ly3-r0
   Image Type:   PowerPC Linux Multi-File Image (gzip compressed)
   Data Size:    3478939 Bytes = 3.3 MiB
   Load Address: 00000000
   Entry Point:  00000000
   Contents:
      Image 0: 2761944 Bytes = 2.6 MiB
      Image 1: 707476 Bytes = 690.9 KiB
      Image 2: 9503 Bytes = 9.3 KiB
   Verifying Checksum ... OK
## Loading init Ramdisk from multi component Legacy Image at 01000000 ...
## Flattened Device Tree from multi component Image at 01000000
   Booting using the fdt at 0x134f0bc
   Uncompressing Multi-File Image ... OK
   Loading Ramdisk to 2ff53000, end 2ffffb94 ... OK
   Loading Device Tree to 03ffa000, end 03fff51e ... OK
Cannot reserve gpages without hugetlb enabled
setup_arch: bootmem
quanta_ly3_setup_arch()
arch: exit

pci 0000:00:00.0: ignoring class b20 (doesn't match header type 01)

ONIE: Using default IPv4 addr: eth0: 192.168.3.10/255.255.255.0
cat: can't open '/var/run/onie/dhcp.logsrv': No such file or directory
discover: installer mode detected.  Running installer.

Please press Enter to activate this console. To check the install status inspect /var/log/onie.log.
Try this:  tail -f /var/log/onie.log

** Installer Mode Enabled **
ONIE:/ # ONIE: Using default IPv4 addr: eth0: 192.168.3.10/255.255.255.0
ONIE: Starting ONIE Service Discovery

ONIE:/ #
```

   c. Use the following command to stop ONIE service discovery:
   "**killall discover**"

Figure 4-8: Stop ONIE Service Discovery Screen

```
** Installer Mode Enabled **
ONIE:/ # ONIE: Using default IPv4 addr: eth0: 192.168.3.10/255.255.255.0
ONIE: Starting ONIE Service Discovery

ONIE:/ # killall discover
ONIE:/ #
```

d. Use the following command to set your switch box IP address:
"**ifconfig eth0 192.168.2.1**"

Figure 4-9: Set Your Switch Box IP Address Screen

```
ONIE:/ #
ONIE:/ # ifconfig eth0 192.168.2.1
ONIE:/ #
```

- *ifconfig eth0*: the command string
- *192.168.2.1*: the switch IP address

e. Use the "**ifconfig**" command to verify if the IP address setting is correct.

Figure 4-10: Verify IP Address Setting Screen

```
ONIE:/ # ifconfig
eth0      Link encap:Ethernet  HWaddr 00:C0:9F:01:02:03
          inet addr:192.168.2.1  Bcast:192.168.2.255  Mask:255.255.255.0
          UP BROADCAST RUNNING MULTICAST  MTU:1500  Metric:1
          RX packets:0 errors:0 dropped:0 overruns:0 frame:0
          TX packets:0 errors:0 dropped:0 overruns:0 carrier:0
          collisions:0 txqueuelen:1000
          RX bytes:0 (0.0 B)  TX bytes:0 (0.0 B)
          Base address:0x8000

ONIE:/ #
```

4. In ONIE Linux shell, use the "**install_url**" command to update the vendor OS code.
Use one of the following commands:
"**install_url tftp://192.168.2.153/ly3-onie-installer-1.5.3**"
or
"**install_url ftp://192.168.2.153/ly3-onie-installer-1.5.3**"
or
"**install_url http://192.168.2.153/ly3-onie-installer-1.5.3**"

- *install_url*: the command string
- *tftp/ftp/http*: use: the server protocol type
- *192.168.2.153*: the server IP address that stores the installer file
- *ly3-onie-installer-1.5.3*: the installer file

Chapter 5: Troubleshooting

This chapter tabulates the common problems and solutions that you may encounter when using the switch and provides customer service information.

5.1 Troubleshooting

Below is a list of the common problems that you may encounter when using the switch. Try to solve these problems with the suggested solutions before calling for service. If problems persist, contact customer support.

5.1.1 Diagnostic Switch Indicator

Table 5-1: Troubleshooting Tips

Problem	Solution
Power LED is off.	The switch does not receive any power. • Check if the AC power cords are connected properly. • Check if the power supply units are completely seated in the chassis. • The power supply unit may be damaged and needs replacement. See “5.2 Replace the Power Supply Unit” on page 35.
A Port LED is off.	• Check if the switch and the connected device are powered on. • Check if the connection in both ends are properly connected. • Check if the cable matches the required length and specification. • Check for a defective cable/port module.
PSU 1 & PSU 2 LED is in Yellow state.	Possible issues: • Fan Lock (15 sec) • OTP: Over Temperature Process • OCP: Over Current Process • OVP: Over Voltage Process • UVP: Under Voltage Process
Fan LED is off.	• Check if the hot-swappable fan modules are completely seated in the chassis. • The fan module may be damaged and needs replacement. See “5.3 Replace the Hot-Swappable Fan Module” on page 37.
Fan LED is in Red state.	• The fan speed failure.

5.1.2 Power and Cooling Problems

If the power indicator does not turn on when the power cord is plugged in, you may have a problem with the power outlet, power cord, or power supply. However, if the unit powers off after running for a while, check for loose power connections, power losses or surges at the power outlet, and verify that the fans on the unit are unobstructed and running prior to shutdown. If you still cannot isolate the problem, then the internal power supply may be defective.

5.1.3 Installation

Verify that all system components have been properly installed. If one or more components appear to be malfunctioning (such as the power cord or network cabling), test them in an alternate environment where you are sure that all the other components are functioning properly.

5.1.4 In-Band Access

You can access the management agent in the switch from anywhere within the attached network using Telnet, a Web browser, or other network management software tools. However, you must first configure the switch with a valid IP address, subnet mask, and default gateway. If you have trouble establishing a link to the management agent, check to see if you have a valid network connection. Then verify that you entered the correct IP address. Also, be sure the port through which you are connecting to the switch has not been disabled. If it has not been disabled, then check the network cabling that runs between your remote location and the switch.

5.2 Replace the Power Supply Unit

The switch has two power supply units (PSU). The PSUs can be replaced without the use of special tools. Before replacing any of the PSUs, verify the status of the PSU to determine if there is a need for replacement. To check the status of the PSU, do the following:

1. Login to the Web Browser Utility.
2. On the upper panel, click to display the rear panel image of the switch.
3. Click the PSU to check its status.

Figure 5-1: Access PSU Info on Web Utility

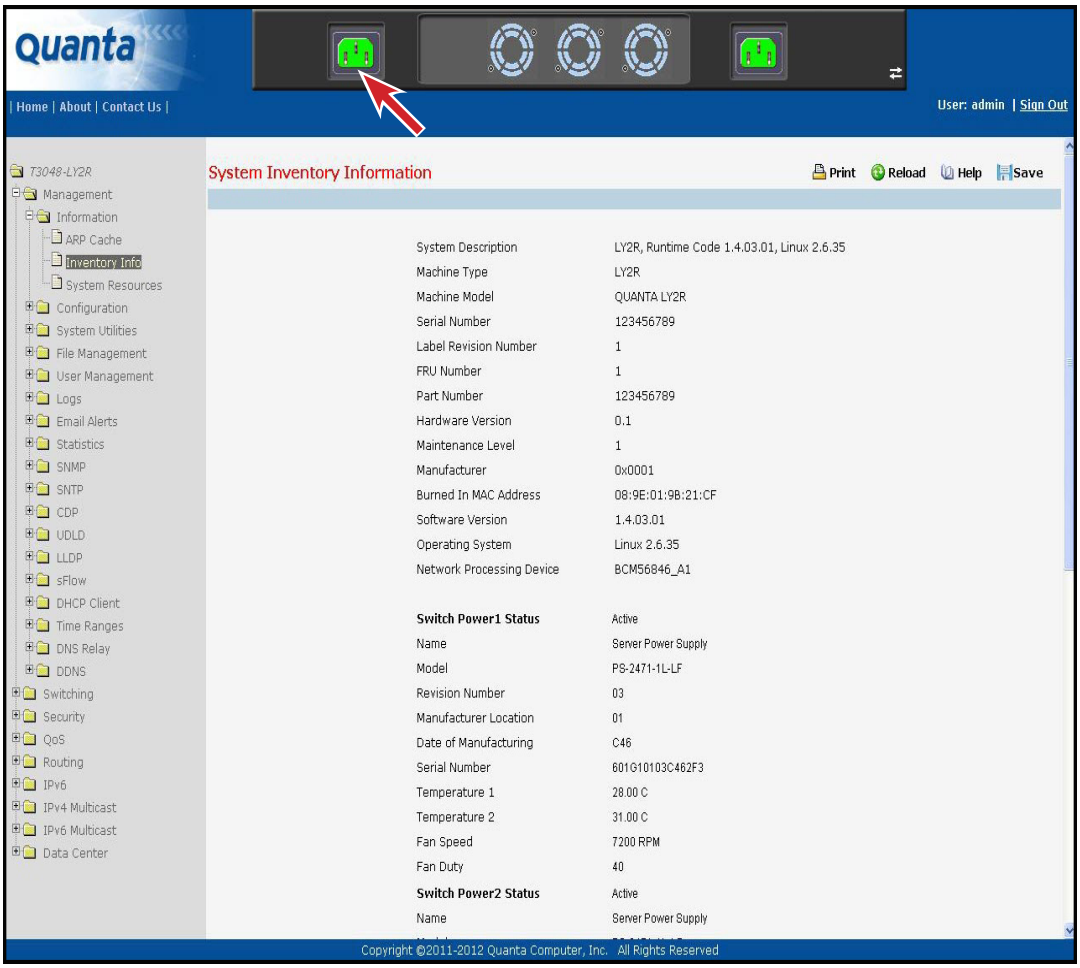

5.2.1 Remove the Power Supply Unit

1. Disconnect the AC power cord of the PSU that you want to remove.

CAUTION:
Ensure that the AC power cord is disconnected from the PSU that you want to remove.

2. Press the plug retainer and pull by the handle to slide the PSU away from the chassis.

Figure 5-2: Remove Power Supply Unit

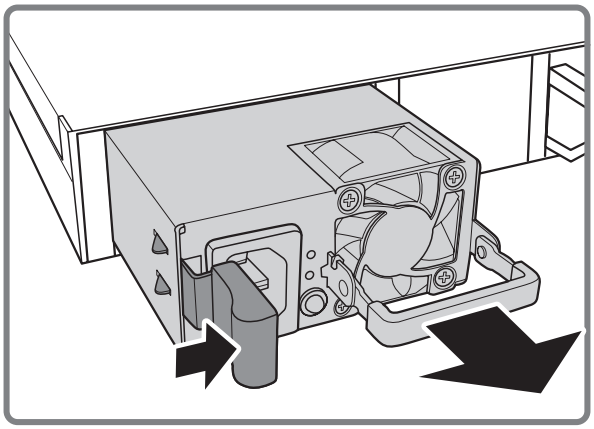

3. Take note of the part number of the removed PSU.

5.2.2 Replace the Power Supply Unit

1. Make sure that the part number of the new PSU is the same as the part number of the removed PSU.
2. Ensure the PSU orientation is correct and then slide the new PSU into the chassis until it is firmly seated.
3. Connect the AC power cord to power on the switch.

WARNING:
Do not install the new PSU into the chassis by force. It should slide into the chassis smoothly. In case otherwise, check if the PSU is properly oriented.

5.3 Replace the Hot-Swappable Fan Module

The switch has three hot-swappable fan modules. These fan modules can be replaced without the use of special tools.

5.3.1 Remove the Fan Module

1. Press the handle retainer and pull by the handle to slide the fan module away from the chassis.

Figure 5-3: Remove Hot-swappable Fan Module

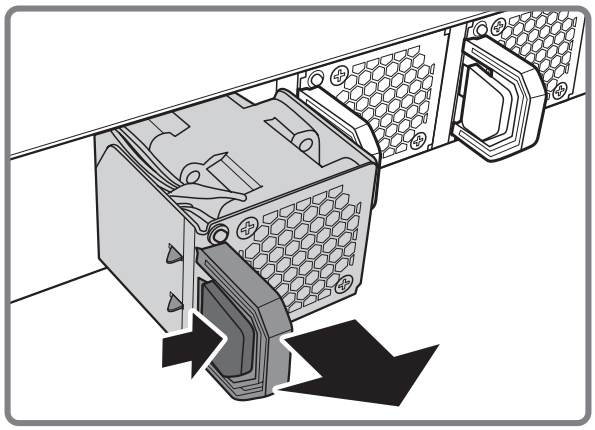

2. Take note of the part number of the removed fan module.

5.3.2 Replace the Fan Module

1. Make sure that the part number of the new fan module is the same as the part number of the removed fan module.
2. Ensure the fan module orientation is correct and then slide the new fan module into the chassis until it is firmly seated.

5.4 Customer Support

WARNING:
There are no user-serviceable parts inside the PSU or Hot-swappable Fan module. Do not disassemble any part of the PSU or Hot-swappable Fan module. Doing so voids the warranty and regulatory certifications.

For maintenance services not mentioned in this guide, please contact the manufacturer's customer support number as indicated on the warranty card.